1-2. Wiring diagram

1-2.1 For the B-type (large) instrument board

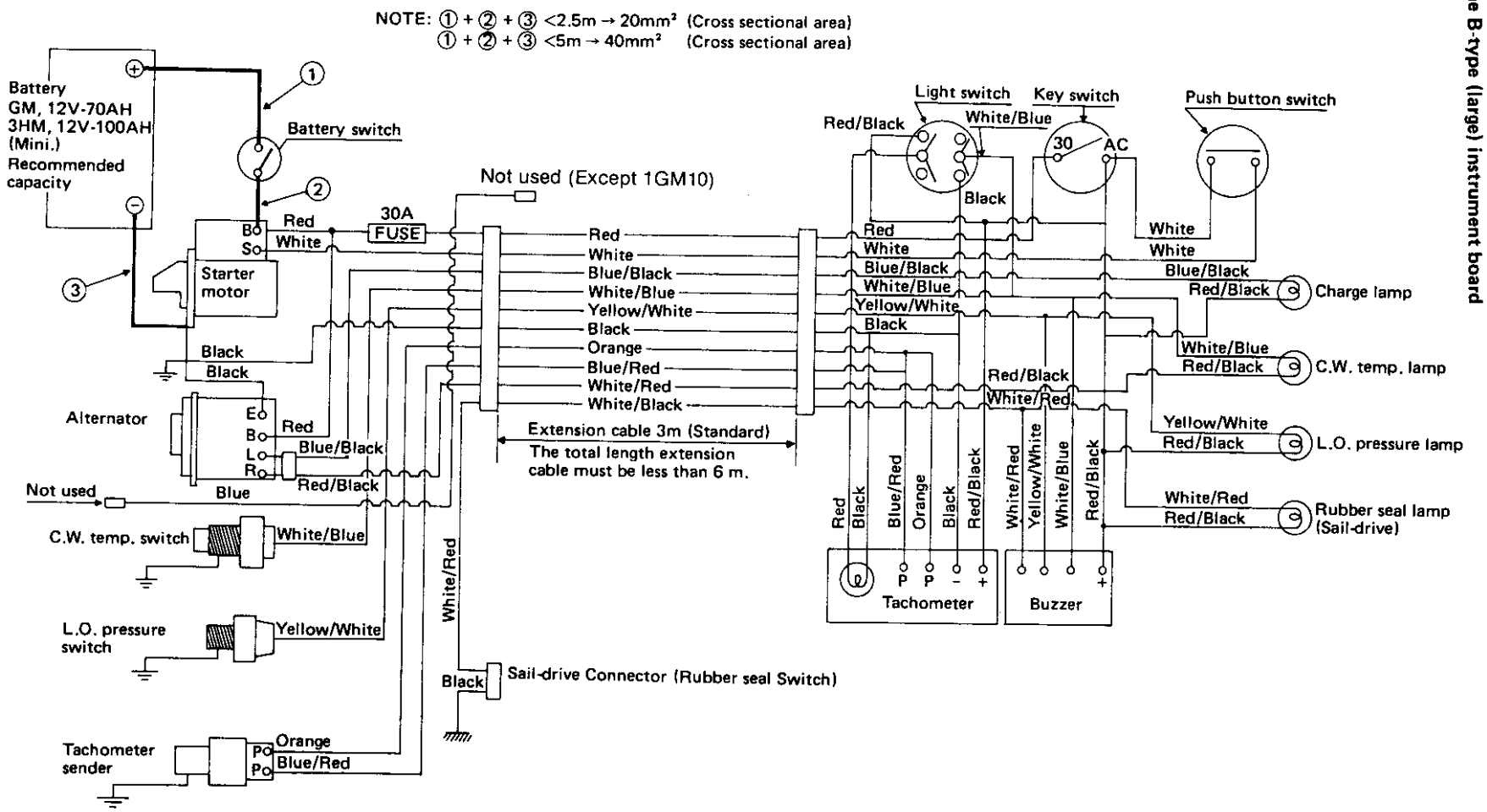

Printed in Japan